CM315E

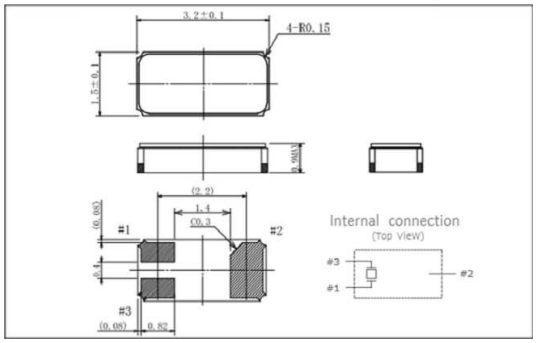

TUNING FORK CRYSTAL UNIT

- Tuning fork crystal with ceranic packaged type.
- High flexibility in layout design of PCB.
- Lid cover connected to GND.
- Most appropriate for portable devices and noise sensitive products.
- Low material resistance 50kΩ Max.availabe.

Standard Specificatione

Nominal Frequency	kHz	32.768
Load Capacitance/CL	pF	6/7/9/12.5
Frequency Tolerance	ppm	+/-20
Operatating Temperature Range	℃	-40 to +85
Storage Temperature Range	℃	-55 to +125
Motional Resistance	Ω	70k Max
Level of drive	uW	1 uW max.
Insulation Resistance	MΩ	500 Min. (at DC100+/-15V)

Investigation Report of Oscillation Circuit

*USB/at 25℃

I C		MICRO CHIP / MEGA 4809 (PWB:A09-3206/07)	
CRYSTAL		CM315E	
Nominal Frequency	kHz	32.768	
Laod Capacitance	pF	7	
Cg,Cd	pF	2	3
Negative Resistance (-R)	ohm	360k	
Drive Level	µW	0.1	

* Our Recommendable Negative Resistance Value : over 300k ohm

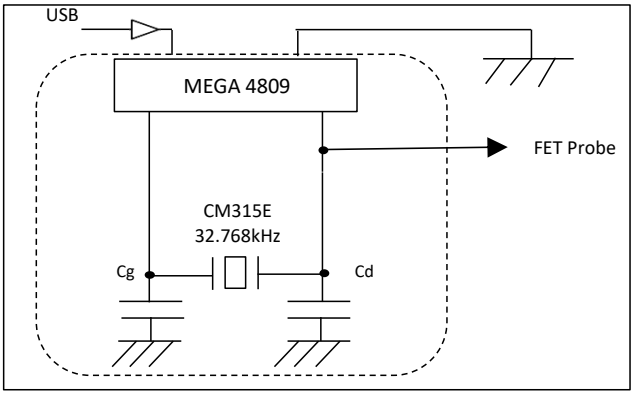

※Matching is ONLY for reference.
It is related to the current board configuration and any changes on the boards and crystal spec is under customer's responsibility.

CITIZEN FINEDEVICE CO., LTD. /MIYOTA PLANT
Micro Devices Division

4107-5 Miyota Miyota-machi Kitasaku-gun
Nagano 3890295 Japan
TEL) +81-267-31-1111
https://cfd.citizen.co.jp/